BRIDGE - CONFIGURATION

update: 20.12.2015 PS

Bridge 1f

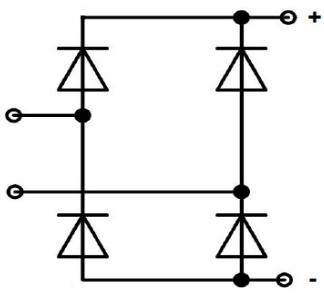

Bridge 1f-C

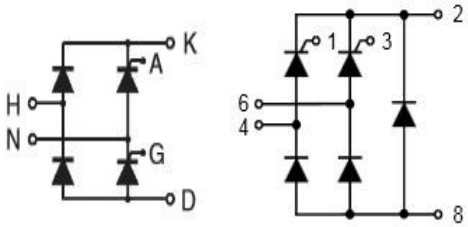

Bridge 3f

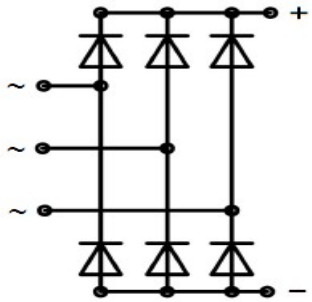

Bridge 3f-C

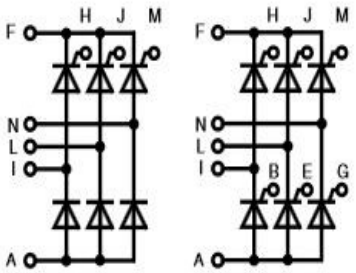

Bridge 3f-CB

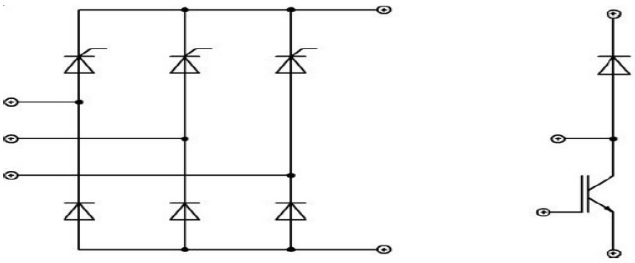

Semic Trade, s.r.o., Volutová 2521/18, 158 00 Praha 5
Telephone: +420 251 625 331, 251 625 332, 251 625 377
GSM: +420 605 999 994 Fax:+420 251 626 252, 251 626 393
www.semic.cz
semic@semic.cz